Product Information

Product Name:	Festival Polyester Sublimated Square Bandanna	SKU: 512166
Imprint Area:	Max Imprint Size : Front : 18" x 18"	
Product Size:	22" x 22"	

Front

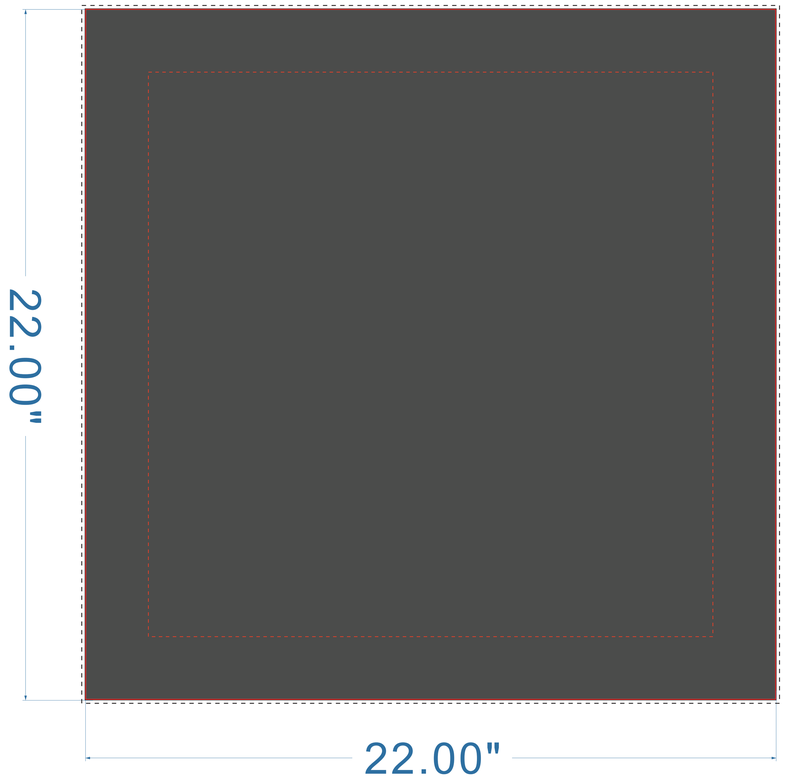
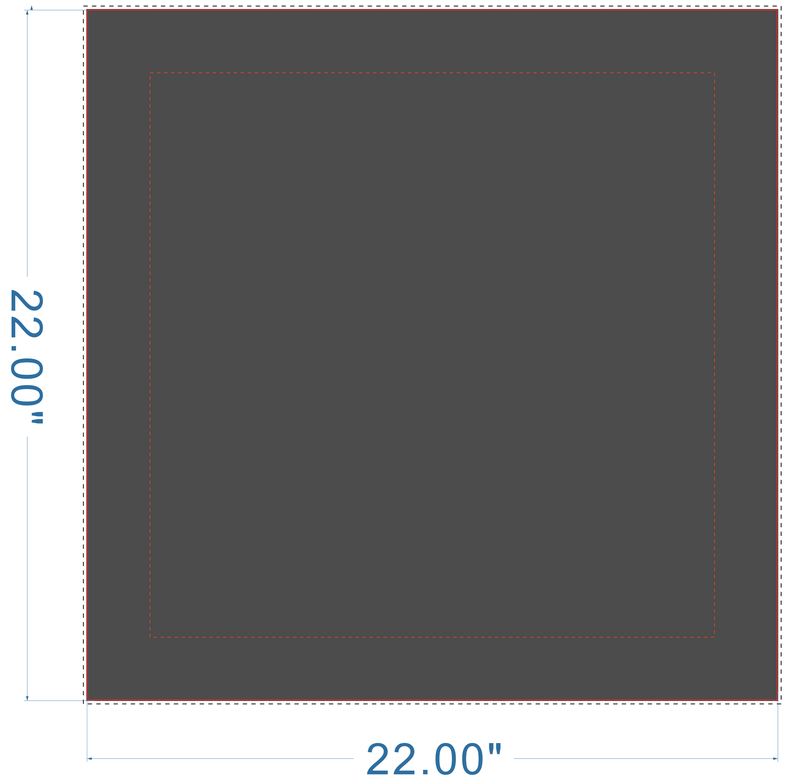
Back